tyco Fire Protection Products

Worldwide Contacts | www.tyco-fire.com

Model G16AC812 Automatic Supervisory Air Supply Nominal 10 psi (0,69 bar) For Supervised Single Interlock Preaction Systems

General Description

The Model G16AC812 Automatic Supervisory Air Supply (Ref. Figure 1) is a factory assembled, factory set, fully automatic, reciprocating oil-less air compressor which provides an easy to install, compact, supervisory air supply for supervised preaction fire protection systems with nominal 10 psi (0,69 bar) supervisory air pressure.

The discharge capacity of the G16AC812 is designed to maintain supervisory pressure for a preaction sprinkler system by providing make-up air at a rate that can overcome small piping system air leaks. However, the discharge capacity of the G16AC812 is insufficient to make up for an abnormal loss in sprinkler system pressure due, for example, to a damaged sprinkler or piping. In such cases, the system will continue to lose pressure and a separate supervisory low pressure alarm switch must be used to initiate a supervisory signal which indicates that the system is in need of repair.

The G16AC812 may be floor, wall, or riser mounted. Hardware for riser mounting may be separately ordered.

NOTICE

The Model G16AC812 Automatic Supervisory Air Supply described herein must be installed and maintained in compliance with this document, as well as with the applicable standards of the National Fire Protection Association, in addition to the standards of any other authorities having jurisdiction. Failure to do so may impair the performance of this device.

The owner is responsible for maintaining their fire protection system and devices in proper operating condition. Contact the installing contractor or product manufacturer with any questions.

Technical Data

Approvals
The Air Pump and Motor (under the name of General Blower Company), as well as the Pressure Operated Switch (under the name of Furnas), for the Model G16AC812 Automatic Supervisory Air Supply are UL Listed and CSA Certified.

Pressure Rating
The G16AC812 Automatic Supervisory Air Supply is factory set to provide nominally 10 psi (0,69 bar) supervisory air pressure with its Pressure Operated Switch set for cut-in and cut-out pressures of approximately 8 psi (0,55 bar) and 12 psi (0,83 bar), respectively.

Discharge Capacity
The average discharge capacity of the G16AC812 over a pressure range of 0 to 12 psi is 1.25 CFM. Graph A provides the typical time to fill system volumes from 50 to 500 gallons (190 to 1900 liters). The data may be extrapolated for larger system volumes.

Wiring Requirements
Wiring to the Pressure Operated Switch must be minimum 12 gauge wire for lengths up to 100 feet; otherwise, 10 gauge wire must be utilized. The electrical supply to the G16AC812 must provide a minimum of 103 volts at the “line” terminals.

Assembly
NEMA 1 general purpose, indoor rated enclosure for all electrical components. The Air Pump piston and cylinder are designed for non-lube operation and the Motor bearings are permanently lubricated. The 1/6 HP Motor operates on 115 VAC, 60 HZ, and the service factor amperage at 115 VAC is 3.7 amps. Field wiring is via a 1/2 inch conduit connection in the Pressure Operated Switch to appropriately sized “line” and “ground” screw terminals.

Weight
25 lbs. (11,4 kg)

Mounting Hardware
The separately ordered Universal Riser Mounting Kit includes two steel adapter brackets, two steel U-bolts, and steel mounting bolts with nuts.

Components
1. Motor
2. Pump
3. Pressure Operated Switch
4. Inlet Air Filter
5. Sensing Line
6. Check Valve
7. Relief Valve

Dimensions Inches (mm)									
A	B	C	E	F	G	H	J	K	L
8 (203)	8-1/8 (206)	13 (330)	2-3/4 (70)	6-1/4 (159)	4-1/4 (108)	5-5/8 (143)	5-1/4 (133)	2-7/8 (73)	5/16 x 1 (8 x 25)

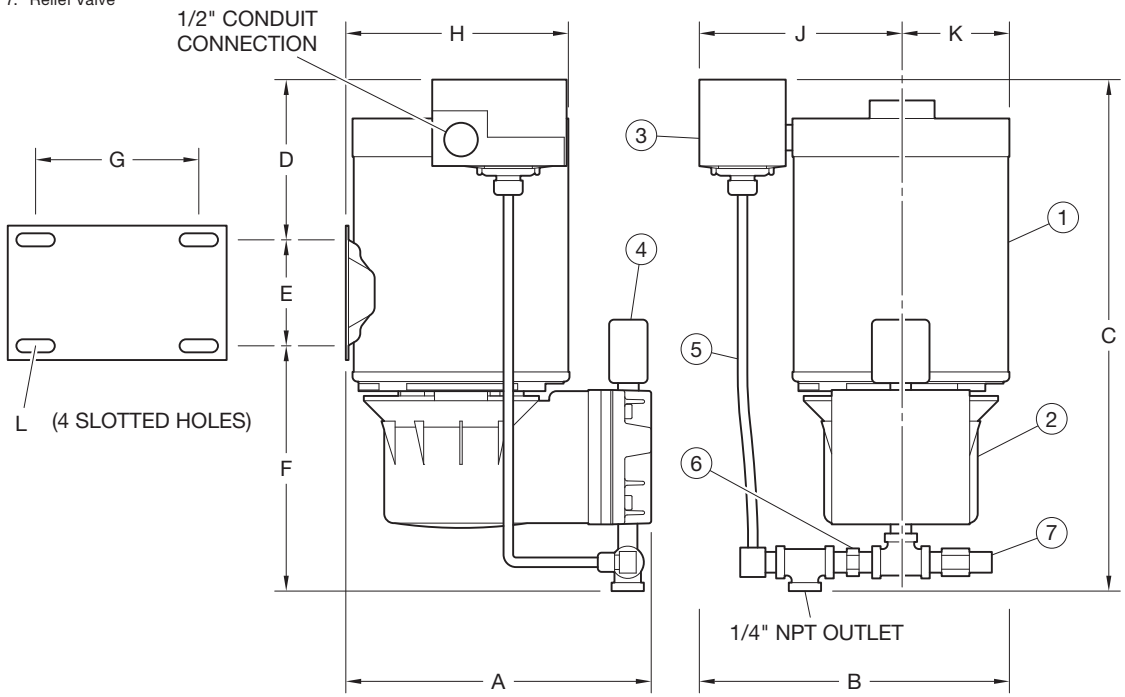

FIGURE 1
MODEL G16AC812 AUTOMATIC SUPERVISORY AIR SUPPLY

Installation

The Model G16AC812 Automatic Supervisory Air Supply is to be installed as follows:

Step 1. The G16AC812 should be located in a clean, well ventilated area. It may be mounted on the floor, wall, or riser. When riser or wall mounted, the Pressure Operated Switch should be located at the top as shown in Figure 1.

Step 2. Supply connections between the 1/4 inch NPT outlet of the G16AC812 and the preaction trim must be 1/4 inch minimum size steel pipe and fittings or minimum 3/8 inch copper tube and fittings.

Step 3. Wire the source of 115 VAC single phase power to the “line” terminals and ground screw of the Pressure Operated Switch with a maximum length of 100 feet of minimum 12 gauge wire. Otherwise, use 10 gauge wire.

All conduit and electrical connections are to be made in accordance with the requirements of the authority having jurisdiction and/or the National Electric Code.

Step 4. While the Air Pump and Motor is running, verify that there is no less than 103 volts available across the “line” terminals.

Step 5. Close the control valve in the preaction trim, and after the Automatic Supervisory Air Supply shuts off, check the air supply connection for leaks.

NOTE: *Do not lubricate any part of the air pump or motor.*

Do not adjust the factory pressure setting of the Pressure Operated Switch.

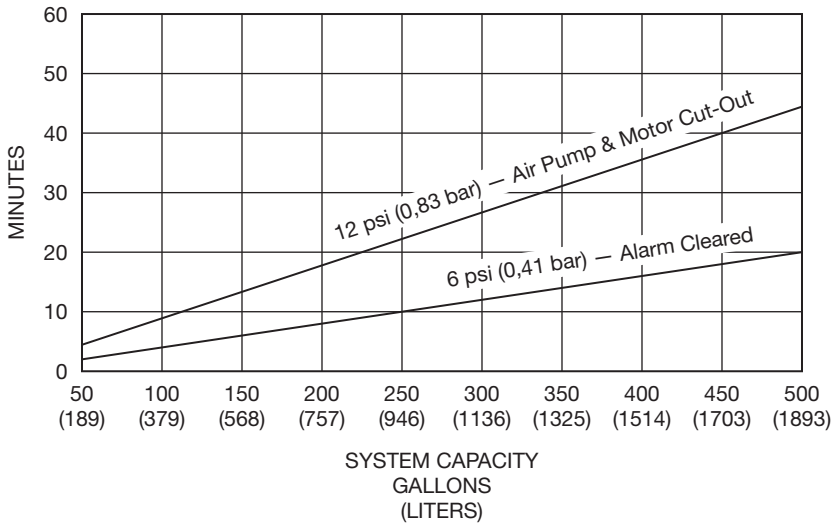

GRAPH A
TIME TO FILL

EXAMPLE:
Starting at 0 psi (0 bar), it will take approximately 10 minutes to pressurize a 250 gallon (950 liters) system to 6 psi (0,41 bar), at which time the supervisory low pressure alarm will clear. An additional 12 minutes will be required for the system to be pressurized to 12 psi (0,83 bar), at which time the Automatic Supervisory Air Supply will shut off.

Care and Maintenance

The following inspection procedure must be performed as indicated, in addition to any specific requirements of the NFPA, and any impairment must be immediately corrected.

Before closing a fire protection system control valve for inspection or maintenance work on the fire protection system that it controls, permission to shut down the affected fire protection system must first be obtained from the proper authorities and all personnel who may be affected by this action must be notified.

After placing a fire protection system in service, notify the proper authorities and advise those responsible for monitoring proprietary and/or central station alarms.

The owner is responsible for the inspection, testing, and maintenance of their fire protection system and devices in compliance with this document, as well as with the applicable standards of the National Fire Protection Association (e.g., NFPA 25), in addition to the standards of any authority having jurisdiction. Contact the installing contractor or product manufacturer with any questions.

It is recommended that automatic sprinkler systems be inspected, tested, and maintained by a qualified Inspection Service.

Inspection Procedure
Periodically, inspect the air filter and clean or replace it as necessary. Excessive operation of the Air Pump and Motor may be an indication of a clogged filter; however, if cleaning or replacing of the filter does not significantly decrease run times, the system must be inspected for abnormal leaks and the leaks repaired.

NOTE: *Do not clean filter elements with petroleum-based products.*

As a guideline for nominally 10 psi (0,69 bar) supervised preaction systems, leaks that result in a pressure drop of 2 psi or greater over a 24 hour period should be considered abnormal. For reference purposes, for a 500 gallon (950 liters) system, this leak rate would result in the G16AC812 operating at a higher than normal frequency rate of more than 15 minutes per day, every other day. Therefore, frequent cycling of the G16AC812 can also be taken as an indication that the preaction system must be inspected for abnormal leaks and the leaks corrected.

Limited Warranty

For warranty terms and conditions, visit www.tyco-fire.com.

Ordering Procedure

Contact your local distributor for availability. When placing an order, indicate the full product name and Part Number (P/N).

G16AC812
Specify: Model G16AC812 Automatic Supervisory Air Supply, P/N 52-150-1-001

Order Separately as Required
Specify: Universal Riser Mounting Kit, P/N 52-150-1-000

Replacement Parts
For replacement parts contact the Air Products Division of General Blower Company, Inc. 210 Carter Drive, West Chester, PA.

Copyright © 2015 Tyco Fire Products, LP. All rights reserved.